Universiteit van Amsterdam

Nikhef

NNLO DIJET SOFT FUNCTIONS AND

Rudi Rahn

QCD workshop 23-1-20
Siegen

Based on work with
Guido Bell (Siegen) and Jim Talbert (NBI),
and Bahman Dehnadi (DESY) and Tobias Mohrmann (Siegen)

OUTLINE

- Brief recap SCET and motivation
- Generic soft functions
- A few results

SOFT-COLLINEAR EFFECTIVE THEORY

- Effective theory:
  - soft/collinear QCD modes dynamic,
  - high virtuality integrated out

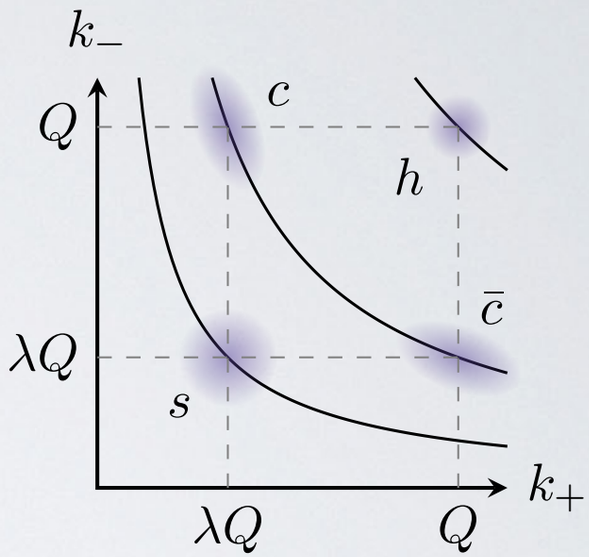

- Decouple soft & collinear in Lagrangian (at leading power)
- Collect factorisation theorem, e.g. for Higgs production

$$\mathrm{d}\sigma \sim H(\mu, m_H) \cdot \mathcal{B}(\mu, p_T) \otimes \mathcal{B}(\mu, p_T) \otimes S(\mu, p_T)$$

SOFT-COLLINEAR EFFECTIVE THEORY

$$\mathrm{d}\sigma \sim H(\mu, m_H) \cdot \mathcal{B}(\mu, p_T) \otimes \mathcal{B}(\mu, p_T) \otimes S(\mu, p_T)$$

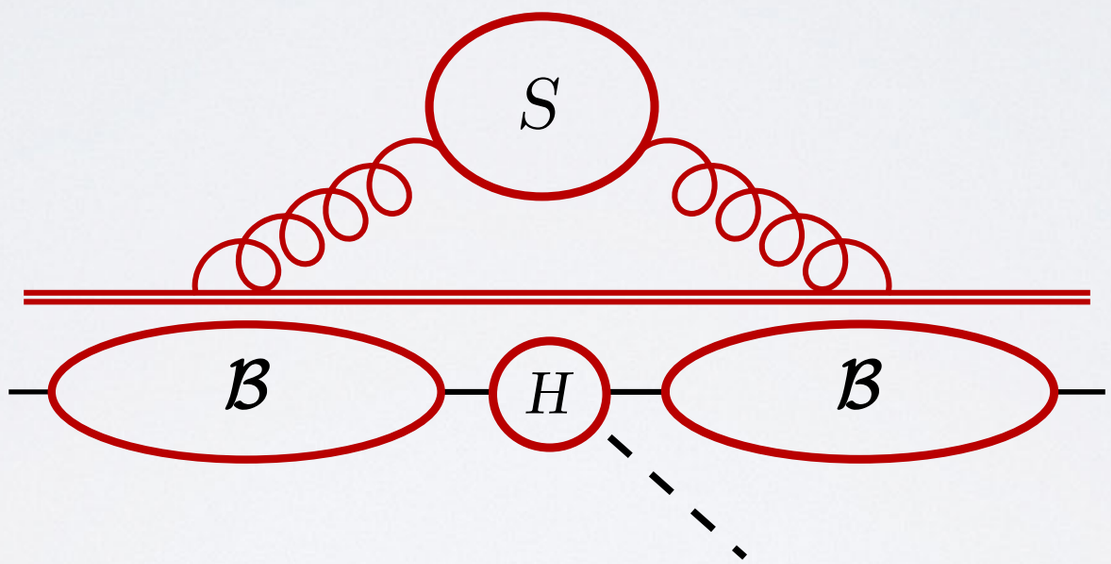

- Single scale ingredients, e.g. $\mu_h \sim m_H, \quad \mu_s \sim p_T$
- Resummation via RG running

RUNNING GEAR

- For NNLL, we need
  - 3-loop Cusp anomalous dimension
  - 2-loop ingredient anomalous dimensions (mod consistency)
  - 1-loop matching corrections / renormalised ingredient functions

RUNNING GEAR

- For NNLL', we need
  - 3-loop Cusp anomalous dimension
  - 2-loop ingredient anomalous dimensions (mod consistency)
  - 2-loop matching corrections / renormalised ingredient functions
- Look at soft functions: Can we streamline this?

DO WE NEED TO?

- Proliferation of similar calculations:
  - Thrust
    [Becher, Schwartz, '08]
  - C-Parameter
    [Hoang, Kolodrubetz, Mateu, Stewart, '14]
  - Angularities
    [Bell, Hornig, Lee, Talbert, '18]
  - Soft-drop jet mass
    [Frye, Larkoski, Schwartz, Yan, '16]
  - ...
  - Threshold Drell-Yan
    [Becher, Neubert, '07]
  - W/Z/H at large p_T
    [Becher, Bell, Lorentzen, Marti, '13, '14]
  - Broadening-axis Angularities
    [Larkoski, Neill, Thaler, '08]
  - Rapidity-dependent jet veto
    [Gangal, Gaunt, Stahlhofen, Tackmann, '16]
  - ...
- Attempts to gather scattered ingredients exist
  [SCETlib: Ebert, Michel, Tackmann, SCET18]
- What about calculations themselves?

SOFT FUNCTIONS

- Universal (B2B) dijet Laplace space soft functions:

$$S(\tau,\mu) = \frac{1}{N_c}\sum_X \mathcal{M}(\tau,\{k_i\})\ \mathrm{Tr}\,\langle 0|S_{\bar{n}}^\dagger(0)S_n(0)|X\rangle\langle X|S_n^\dagger(0)S_{\bar{n}}(0)|0\rangle$$

  - Matrix element is not nice, but fixed
  - Measurement is harmless, but observable-dependent

- Extract divergences, expand to Laurent series:

$$S_2 \sim \frac{\int \mathrm{d}\{x\} f_4(\{x\})}{\epsilon^4} + \frac{\int \mathrm{d}\{x\} f_3(\{x\})}{\epsilon^3} + \frac{\int \mathrm{d}\{x\} f_2(\{x\})}{\epsilon^2} + \ldots$$

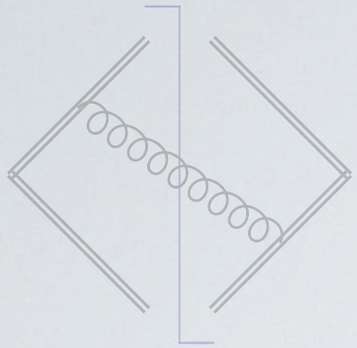
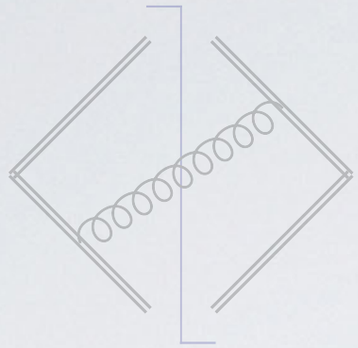

NLO

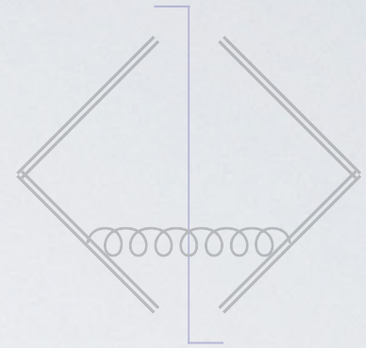
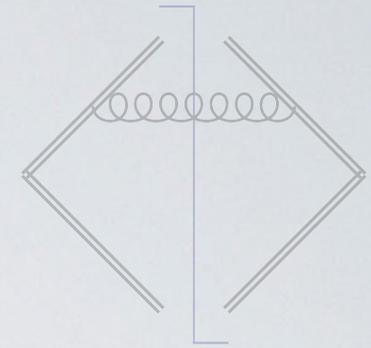

- Matrix element: $$|\mathcal{A}(k)|^2 \sim \frac{\alpha_s C_F}{k_+ k_-}$$
- Parametrise: $$y_k = \frac{k_+}{k_-}, \quad k_T = \sqrt{k_+ k_-}$$
- (Informed) Assumption: $$\mathcal{M}^{(1)}(\tau, k) = e^{-\tau\, k_T\, y_k^{\frac{n}{2}}}\, f(y_k, \vartheta_k)$$
- Master formula after integrating: (SCET-1)

$$S_R(\tau, \epsilon) \sim \Gamma(-2\epsilon) \int_0^1 \mathrm{d}t_k \sqrt{4 t_k \bar{t}_k}^{-1-2\epsilon} \int_0^1 \mathrm{d}y_k\, y_k^{-1+n\epsilon}\, f(y_k, t_k)^{2\epsilon}$$

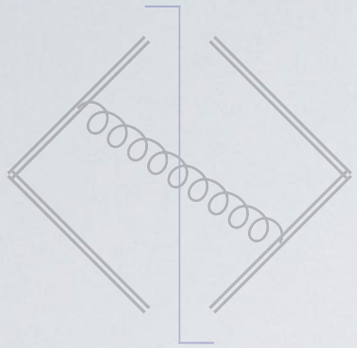
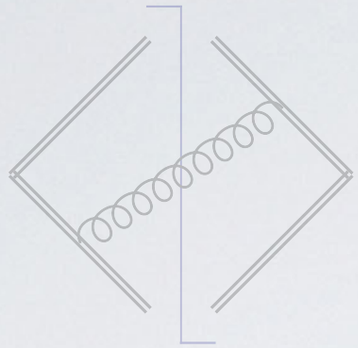

NLO

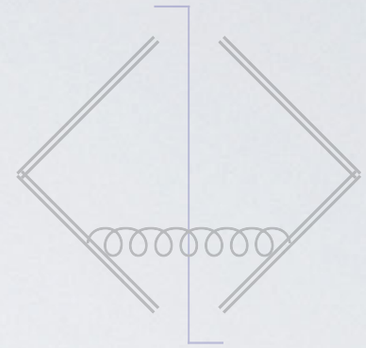
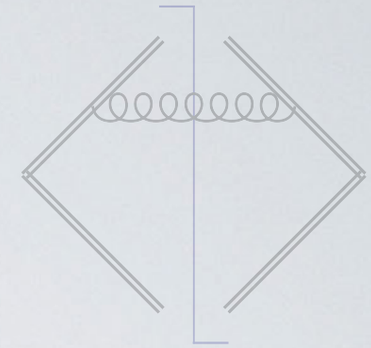

- Matrix element: $$|\mathcal{A}(k)|^2 \sim \frac{\alpha_s C_F}{k_+ k_-}$$
- Parametrise: $$y_k = \frac{k_+}{k_-}, \quad k_T = \sqrt{k_+ k_-}$$
- (Informed) Assumption: $$\mathcal{M}^{(1)}(\tau, k) = e^{-\tau\, k_T\, y_k^{\frac{n}{2}}}\, f(y_k, \vartheta_k)$$
- Master formula after integrating: (SCET-1)

$$S_R(\tau, \epsilon) \sim \Gamma(-2\epsilon) \int_0^1 \mathrm{d}t_k \sqrt{4 t_k \bar{t}_k}^{-1-2\epsilon} \int_0^1 \mathrm{d}y_k\, y_k^{-1+n\epsilon}\, f(y_k, t_k)^{2\epsilon}$$

"INFORMED ASSUMPTION"

$$\mathcal{M}^{(1)}(\tau, k) = e^{-\tau\, k_T\, y_k^{\frac{n}{2}}}\; f(y_k, \vartheta_k)$$

- Exponential: Fourier/Laplace transform of delta
- τ : calculation space observable
- k_T: only scale, power determined by mass dimension of the observable (could in principle have any positive power)
- y_k dependence: classification (*not* an assumption), n tied to mode structure
- $f(y_k, \vartheta_k)$: must be positive and almost everywhere non-zero
  - Excludes non-global observables

WHY IS THIS IMPORTANT?

- Divergences in amplitude ⇔ behaviour of observable

$$S(\tau,\mu) = \frac{1}{N_c}\sum_X \mathcal{M}(\tau,\{k_i\})\ \mathrm{Tr}\,\langle 0|S^\dagger_{\bar{n}}(0)S_n(0)|X\rangle\langle X|S^\dagger_n(0)S_{\bar{n}}(0)|0\rangle$$

$$\mathcal{M}^{(1)}(\tau,k) = e^{-\tau\, k_T\, y_k^{\frac{n}{2}}\ f(y_k,\vartheta_k)}$$

$$|\mathcal{A}(k)|^2 \sim \frac{\alpha_s C_F}{k_+ k_-} \to \frac{1}{y_k\, k_T}$$

- At NLO: We need to understand how the observable depends on k_T and y_k.

- Mass dimension and mode structure are enough here:

$$S_R(\tau,\epsilon) \sim \Gamma(-2\epsilon)\int_0^1 \mathrm{d}t_k\,\sqrt{4t_k\bar{t}_k}^{\,-1-2\epsilon}\int_0^1 \mathrm{d}y_k\ y_k^{-1+n\epsilon}\ f(y_k,t_k)^{2\epsilon}$$

NNLO

- Same idea, two structures: $C_F C_A, C_F T_f n_f$ & C_F^2

- Divergences Correlated
  - Collinear to { Wilson line / Each other
  - Soft { Globally / Relatively

[1812.08690]

- Divergences Uncorrelated
  - Collinear to { Wilson line / Wilson line
  - Soft { Globally / Relatively

[In preparation.]

NNLO

- Same idea, two structures: $C_F C_A, C_F T_f n_f$ & C_F^2

- Divergences Correlated
  - Collinear to { Wilson line / IRC safety }
  - Soft { Mass dim. / IRC safety }

[1812.08690]

- Divergences Uncorrelated
  - Collinear to { Wilson line / Wilson line }
  - Soft { Mass dim. / IRC safety }

[In preparation.]

NNLO

- Same idea, two structures: $C_F C_A, C_F T_f n_f$ & C_F^2

- Divergences Correlated
  - Collinear to { y^n Wilson line; IRC safety }
  - Soft { Mass dim. Globally; IRC safety Relatively }

[1812.08690]

- Divergences Uncorrelated
  - Collinear to { y_k^n ? Wilson line; y_l^n ? Wilson line }
  - Soft { Mass dim. Globally; IRC safety Relatively }

[In preparation.]

A WORD ON C_F^2

- Two unconstrained limits cause problems:
  - Take NAE, assume $n > 0$:

$$\omega(k,l) = k_T \boxed{y_k^{n/2}} f(y_k, \vartheta_k) + l_T \boxed{y_l^{n/2}} f(y_l, \vartheta_l)$$

A WORD ON C_F^2

- Two unconstrained limits cause problems:
  - Take NAE, assume $n > 0$:

$$\omega(k,l) = k_T \boxed{y_k^{n/2}} f(y_k, \vartheta_k) + \boxed{l_T} y_l^{n/2} f(y_l, \vartheta_l)$$

A WORD ON C_F^2

- Two unconstrained limits cause problems:
  - Take NAE, assume $n > 0$:

$$\omega(k,l) = k_T\, y_k^{n/2}\, f(y_k, \vartheta_k) + l_T\, y_l^{n/2}\, f(y_l, \vartheta_l)$$

- Solution: Use linearity in scale variables to sneak in correcting factors: $k_T \sim y_l^{n/2}\, k'_T$, similar for l

$$\omega(k,l) = k'_T\, \frac{\boxed{y_l^{n/2}}}{(1+y_l)^n}\boxed{y_k^{n/2}} f(y_k, \vartheta_k) + l'_T\, \frac{\boxed{y_k^{n/2}}}{(1+y_k)^n}\boxed{y_l^{n/2}} f(y_l, \vartheta_l)$$

SOFTSERVE

(Soft function Simulation and Evaluation for Real and Virtual Emissions)

- C++ (well, C) implementation, using Cuba library (Divonne)
- A recipe to generate numerical integration binaries
- Manual user input required (apply parametrisation to definition)
- Scripts for renormalisation, Fourier transforms
- Uses substitutions to flatten integrable divergences
- Can be found on softserve.hepforge.org (for now only correlated)

SOFTSERVE IN ACTION

- Edit input ⇒ make ⇒ run

Open ▾ Input_Measurement_Correlated.cpp ~/Software/SoftSERVE_1.0.0/SCET1 Save

```
using namespace boost::math;
#endif /* BOOSTEDSOURCE_H_ */

double FA(decimal v,decimal tl,decimal y,decimal tk,decimal u,decimal b) {
        // Please use these predefined variables a, tkl (=t_kl), ck (=cos theta_k) or tk (=(1-ck)/2), cl (=cos theta_l) or tl (=(1-cl)/2) together with b and y below
        decimal tkl=T(u,v);
        decimal ck=Ck(tk);
        decimal cl=Cl(tl);
        decimal a=A(u,v);
        decimal FA;

        /* Please input the C++ syntax measurement function F_A here. As a reminder: F_A you get by using the
         * parametrisation for the correlated emission from the manual to the exponent of the full
         * measurement exponential, and discarding a few factors.
         *
         * Don't forget to capture all zeroes and integrable divergences via if-clauses that set FA to a constant.
         */
        FA=a*(1./(a+b+a*(1.+a*b)*y)+b/(a*(a+b)+(1.+a*b)*y));

        if (a<=0.) {
                FA=1.;
        }

        // Automated error message if a zero/divergence is not defused, please leave this as it is
        if (isnan(FA) || isinf(FA) || FA<=0.) {
                cerr<<"F_A error: zero, divergence or ambiguous expression with value FA="<<FA<<" at y="<<y<<" a="<<a<<" b="<<b<<" tkl="<<tkl<<" tl="<<tl<<" tk="<<tk<<endl;
                FA=1.;
        }
        return ReturnDouble(FA);
}
```

C++ ▾ Tab Width: 8 ▾ Ln 106, Col 4 ▾ INS

SOFTSERVE IN ACTION

- Edit input ⇒ make ⇒ run

```
exastris@meneltarma: ~/Software/SoftSERVE_1.0.0/SCET1
exastris@meneltarma:~/Software/SoftSERVE_1.0.0/SCET1$ make correlated
Compiling ../Sources/SCET1/1AN/src/2IntCA.cpp
Compiling ../Sources/SCET1/1AN/src/IntRV.cpp
Compiling ../Sources/SCET1/1AN/src/5IntCA.cpp
Compiling ../Sources/SCET1/1AN/src/4IntCA.cpp
Compiling ../Sources/SCET1/1AN/src/IntOL.cpp
Compiling ../Sources/SCET1/1AN/src/4IntNF.cpp
Compiling ../Sources/SCET1/1AN/src/3IntNF.cpp
Compiling ../Sources/SCET1/1AN/src/3IntCA.cpp
Compiling ../Sources/SCET1/1AN/src/4IntPNF.cpp
Compiling ../Sources/SCET1/1AN/src/3IntPNF.cpp
Compiling ../Sources/SCET1/1AN/src/5IntNF.cpp
Compiling ../Sources/SCET1/1AN/src/5IntPNF.cpp
Compiling ../Sources/SCET1/1AN/src/XFactorCA.cpp
Compiling ../Sources/SCET1/1AN/src/XFactorNf.cpp
Compiling ../Sources/SCET1/1AN/src/XFactorPNf.cpp
Compiling ../Sources/SCET1/1AN/src/Master1P.cpp
Compiling ../Sources/SCET1/1AN/src/Auxiliaries.cpp
Compiling ../Sources/SCET1/1AN/src/Prefactors.cpp
Compiling Input_Measurement_Correlated.cpp
Compiling Input_Integrator.cpp
Compiling Input_Common.cpp
Linking object files for target "C-Parameter": 1-Particle
-- Link finished, Executable for "C-Parameter" 1P is complete --
Compiling ../Sources/SCET1/1AN/src/MasterNF.cpp
Linking object files for target "C-Parameter": nf Structure
-- Link finished, Executable for "C-Parameter" nf is complete --
Compiling ../Sources/SCET1/1AN/src/MasterCA.cpp
Linking object files for target "C-Parameter": CA structure
-- Link finished, Executable for "C-Parameter" CA is complete --
exastris@meneltarma:~/Software/SoftSERVE_1.0.0/SCET1$
```

SOFTSERVE IN ACTION

- Edit input ⇒ make ⇒ run

```
exastris@meneltarma: ~/Software/SoftSERVE_1.0.0/SCET1/Execut...
exastris@meneltarma:~/Software/SoftSERVE_1.0.0/SCET1/Executables$ ./C-Parameter\ NF

Observable name: C-Parameter.
Starting calculation for Nf structure.
3-dimensional integration in progress...
3-d integration successful after 241810 function evaluations.
Sufficient data for eps^(-3) coefficient available, result:
1.33333 +/- -5.77876e-06, with probability of incorrect error estimate of 0.
4-dimensional integration in progress...
4-d integration successful after 254012 function evaluations.
Sufficient data for eps^(-2) coefficient available, result:
2.22223 +/- 0.000101505, with probability of incorrect error estimate of 1.11022e-1
6.
5-dimensional integration in progress...
5-d integration successful after 280733 function evaluations.
Sufficient data for eps^(-1) coefficient available, result:
6.34143 +/- 0.000691284, with probability of incorrect error estimate of 4.53598e-0
6.
Sufficient data for eps^(0) coefficient available, result:
71.5982 +/- 0.00396117, with probability of incorrect error estimate of 4.53985e-06
.
exastris@meneltarma:~/Software/SoftSERVE_1.0.0/SCET1/Executables$
```

VANILLA RESULT: ANGULARITIES

- Generalisation of Thrust
- Used for resummation in [Bell et al., 1808.07867]

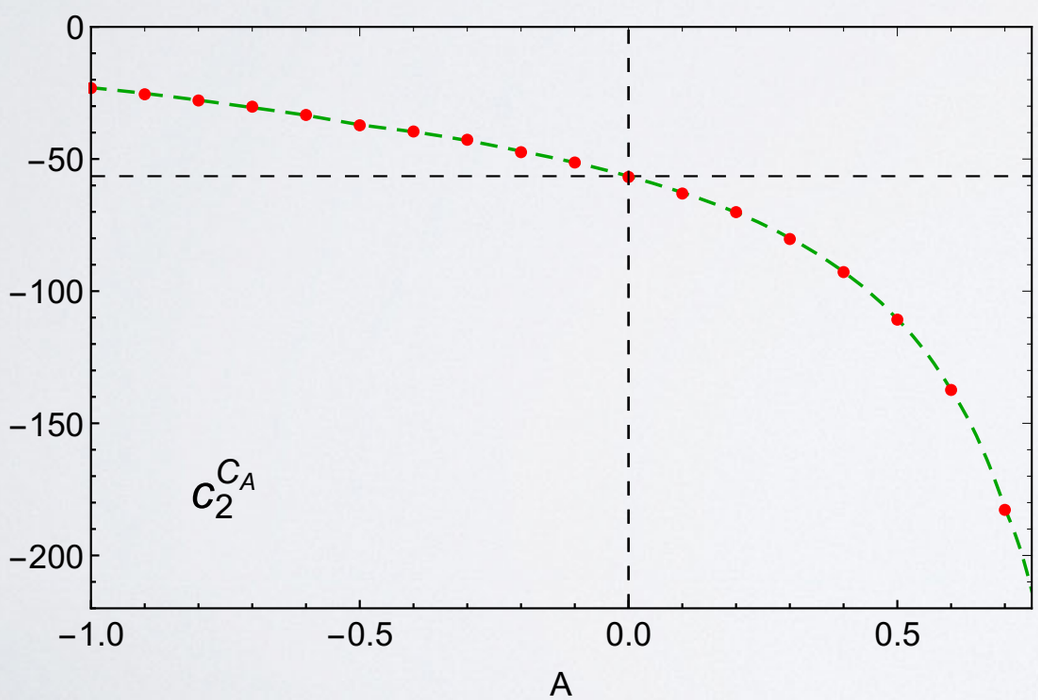

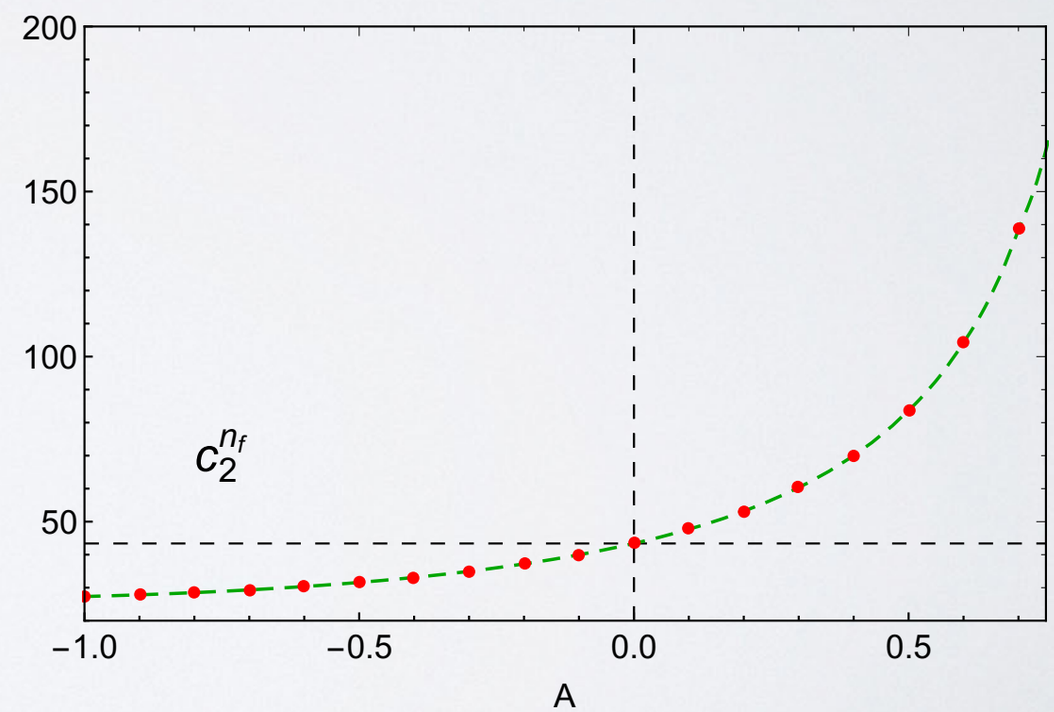

VANILLA RESULT: SOFT DROP JET MASS

- Violates Non-abelian exponentiation
- Green: Extraction using EVENT2 in [Frye et al,1603.09338]

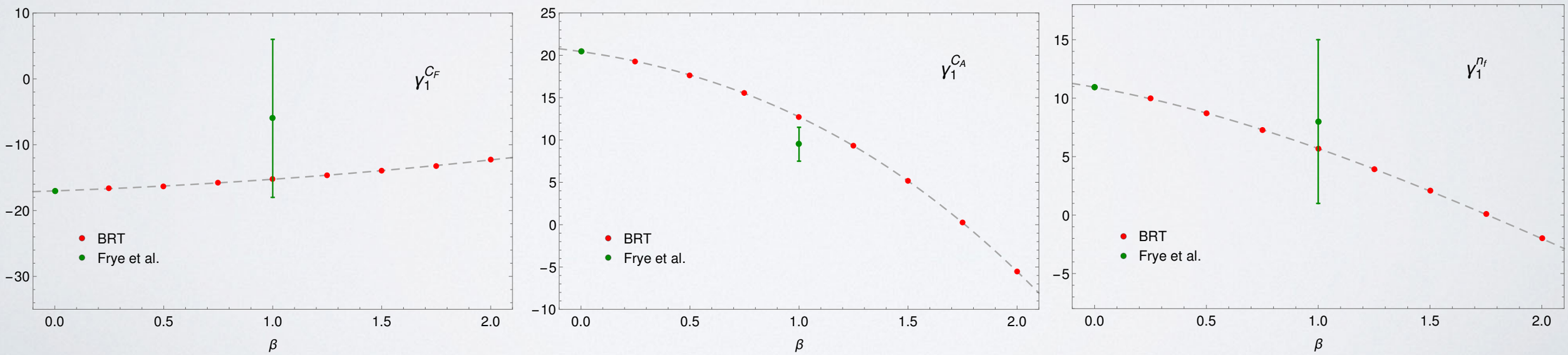

ASIDE: COMPLEXITY

- Performance of SoftSERVE is essentially uncorrelated with complexity of input

- Angularities measurement (momentum space):

$$\delta\big(\omega_A - \min(k_+, k_-)^{1-A/2} \max(k_+, k_-)^{A/2} - \min(l_+, l_-)^{1-A/2} \max(l_+, l_-)^{A/2}\big)$$

SOFT DROP MEASUREMENT

- A bit more complex

$$
\begin{aligned}
&\theta(k_- - k_+)\theta(l_+ - l_-) \\
&\times \Big[\theta(k_0^{1+\beta/2}k_+^{-\beta/2} - l_0^{1+\beta/2}l_-^{-\beta/2})\delta(\omega_{SD} - k_0^{1+\beta/2}k_+^{-\beta/2}) + \\
&\quad + \theta(l_0^{1+\beta/2}l_-^{-\beta/2} - k_0^{1+\beta/2}k_+^{-\beta/2})\delta(\omega_{SD} - l_0^{1+\beta/2}l_-^{-\beta/2})\Big] \\
&+ \theta(k_- - k_+)\theta(l_- - l_+) \\
&\times \Big[\theta(k_+ - \frac{k\cdot l}{l_0})\theta(l_+ - \frac{k\cdot l}{k_0})\delta(\omega_{SD} - (k_0 + l_0)^{1+\beta/2}(k_+ + l_+)^{-\beta/2}) \\
&\quad + \big[1 - \theta(k_+ - \frac{k\cdot l}{l_0})\theta(l_+ - \frac{k\cdot l}{k_0})\big]\times \\
&\qquad \Big[\theta(k_0^{1+\beta/2}k_+^{-\beta/2} - l_0^{1+\beta/2}l_+^{-\beta/2})\delta(\omega_{SD} - k_0^{1+\beta/2}k_+^{-\beta/2}) \\
&\quad + \theta(l_0^{1+\beta/2}l_+^{-\beta/2} - k_0^{1+\beta/2}k_+^{-\beta/2})\delta(\omega_{SD} - l_0^{1+\beta/2}l_+^{-\beta/2})\Big]\Big] \\
&+ (n \leftrightarrow \bar{n})
\end{aligned}
$$

DIJET NON-BACK-2-BACK

- Boost to B2B frame
- Transverse space more complicated, more angular dependence (unless we're lucky): 5 dynamic angles, not 3
- If we're lucky: [Caola et al., 1807.05835], ϵ^{-} 4,3,2,1,0

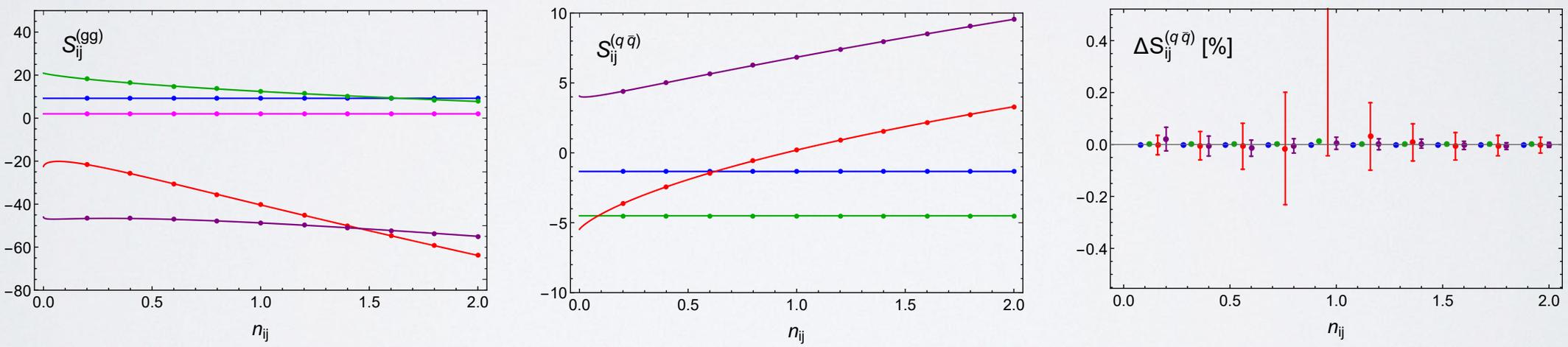

- Not even an SCET calculation:

"The double-soft integral for an arbitrary angle between hard radiators"

CONCLUSION

- We have developed an approach to streamline the calculation of dijet soft functions in (mostly) SCET
- Though not mentioned: SCET-1 and SCET-2 covered
- SoftSERVE is publicly available for correlated emissions, and will soon be for the uncorrelated ones
- Some ideas for extensions exist (e.g. non-global, next talk by Bahman), taking requests…

SCET-2

- SCET-2 observables exhibit rapidity divergences
- Resum using *collinear anomaly* or *Rapidity renormalisation group*
  [Becher, Neubert, '11] [Chiu et al., '12]
- Second regulator required
- We use a phase space regulator

$$\mathrm{dPS}^{(n)} = \prod_{i=1}^{n} \frac{\mathrm{d}^d k_i}{(2\pi)^d} \left(\frac{\nu}{2E_{k_i}} \right)^{\alpha} \delta^+(k_i^2)$$

CALAMITY!

- Transverse momentum resummation using phase space regulator and RRG: poles don't cancel!
- RRG requires regulator on connected webs
- Using that we reproduce the correct result:

$$S_2 = 10.352(8)[10.347]C_F T_f n_F - 16.517(59)[16.507]C_f C_A + \frac{\pi^4}{18} C_F^2$$

[Lübbert et al, 1602.01829]

SCET-2, PART DEUX

- Angularities are parametric across a spectrum
- One point is SCET-2
- We can interpolate! [1805.12414]: $d_2 = -\gamma^S_{1,\mathrm{IP}} + \beta_0 d'_1$

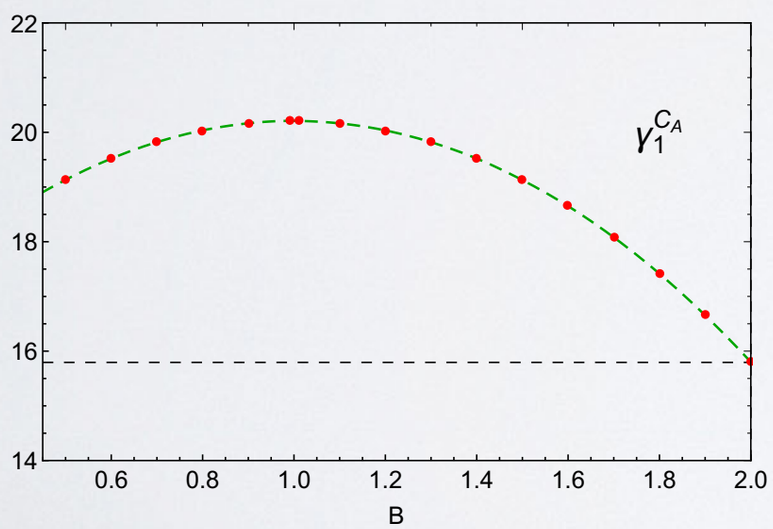

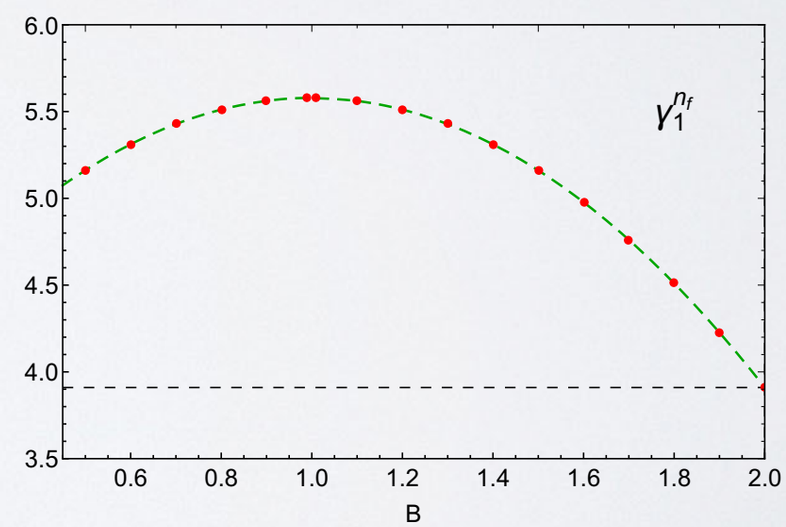

SCET-2, PART DEUX

- Angularities are parametric across a spectrum
- One point is SCET-2
- We can interpolate! [1805.12414]: $d_2 = -\gamma^S_{1,\mathrm{IP}} + \beta_0 d_1'$

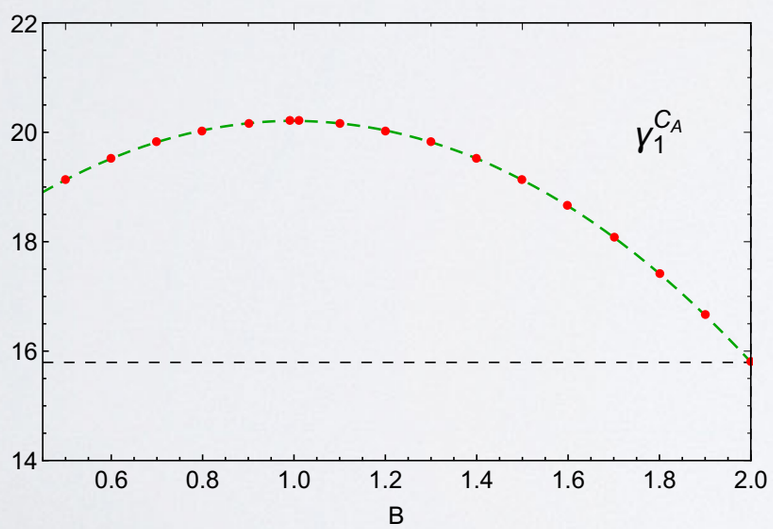

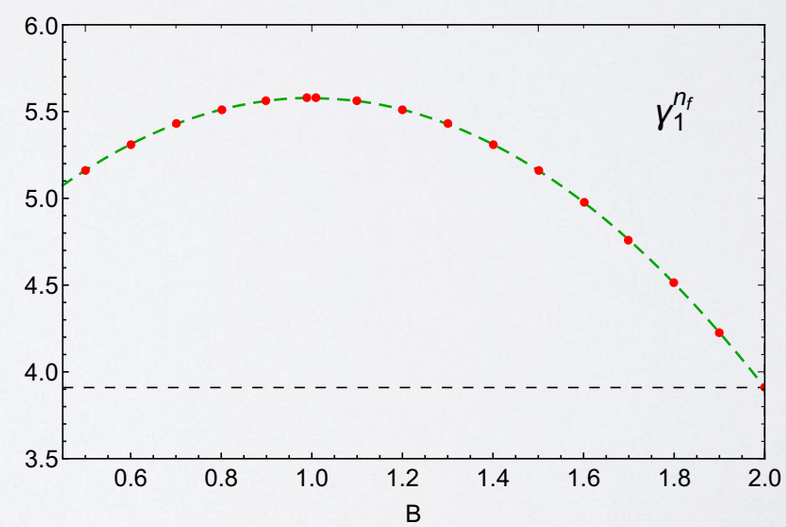

- But only for anomaly exponent/anomalous dimension